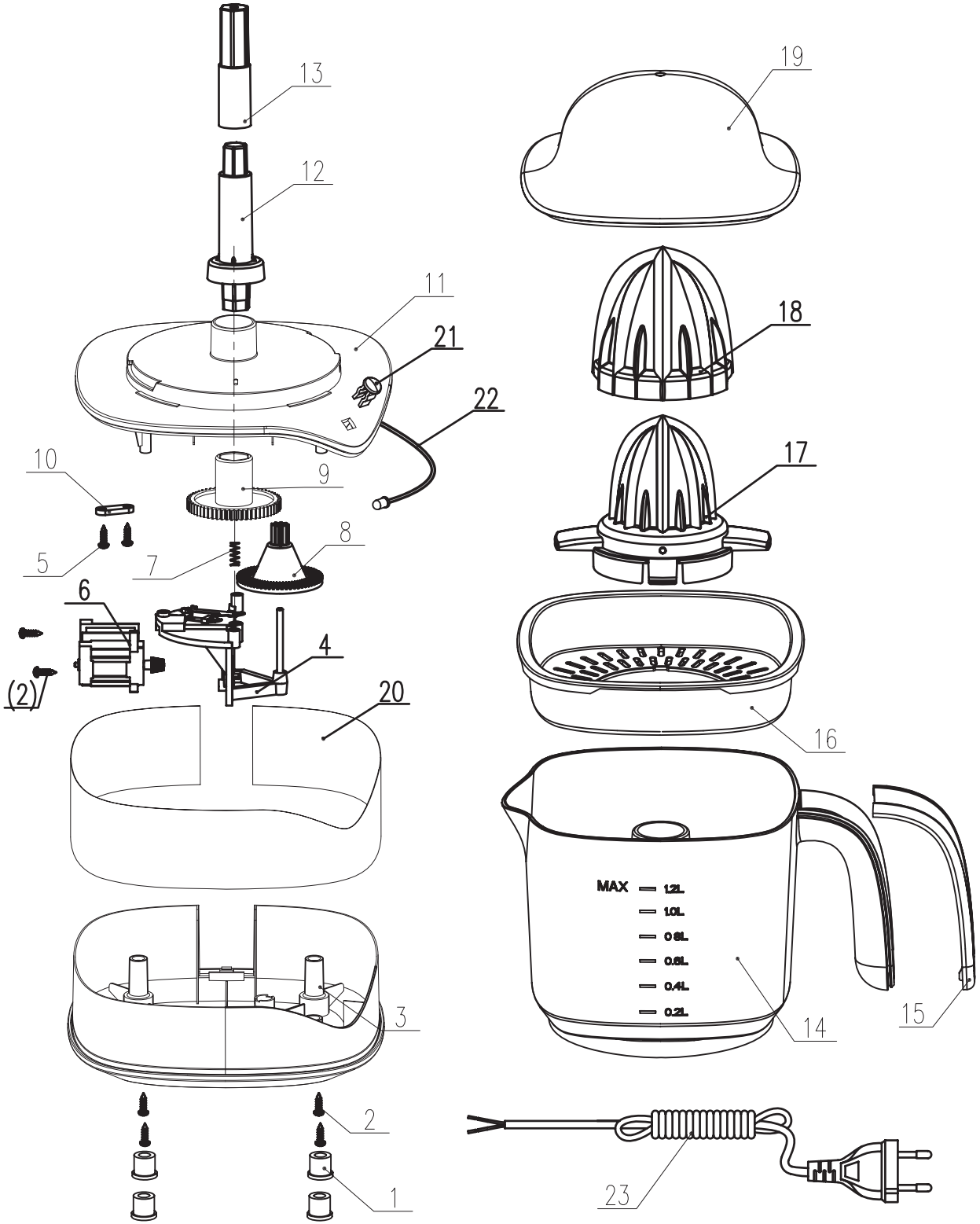

Electric Circuit Diagram

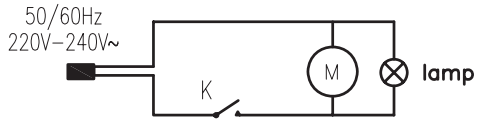

No.	Symbol	Name	Mat/spec	QTY	Remark
23	D-RX01	power cord		1	
22	D-8020-E01	LED lamp		1	
21	D-8020-P03	lamp cover	AS	1	
20	D-8020-M01	shell	SUS430	1	
19	D-8020-P25	protective cover	AS	1	
18	D-ZT03-P02	orange cone	PP	1	
17	D-ZT03-P01	lemon cone	PP	1	
16	D-8020-P23	filter	PP	1	
15	D-8020-P22	handle cover	PP	1	
14	D-8020-P21	cup	AS	1	
13	D-8009-P04	shaft extend	ABS	1	
12	D-8009-P03	power drive shaft	ABS	1	
11	D-8020-P01	body	PP	1	
10	D-TY-P01	fix board	PP	1	
09	D-BS01-P04A	end gear	POM	1	
08	D-BS01-P03	middle gear	POM	1	
07	D-BS01-M04	spring	65Mn	1	
06	D-MD01	motor assembly	25W/40W	1	
05	ST3*10	tapping screw	Q235	2	
04	D-BS01-P01	motor bracket	PC	1	
03	D-8020-P02	bottom	PP	1	
02	ST3*12	tapping screw	Q235	6	
01	D-FD02	feet	PVC	4	

Ningbo Sunshine Electric Appliance Co., Ltd
No.2 Ivjia, Zhengxiang Village, Ditang Town,
Yuyao City, Zhejiang, China

Citrus juicer CJ-8020-BL (original model D-8020A)